IF IN DOUBT ASK

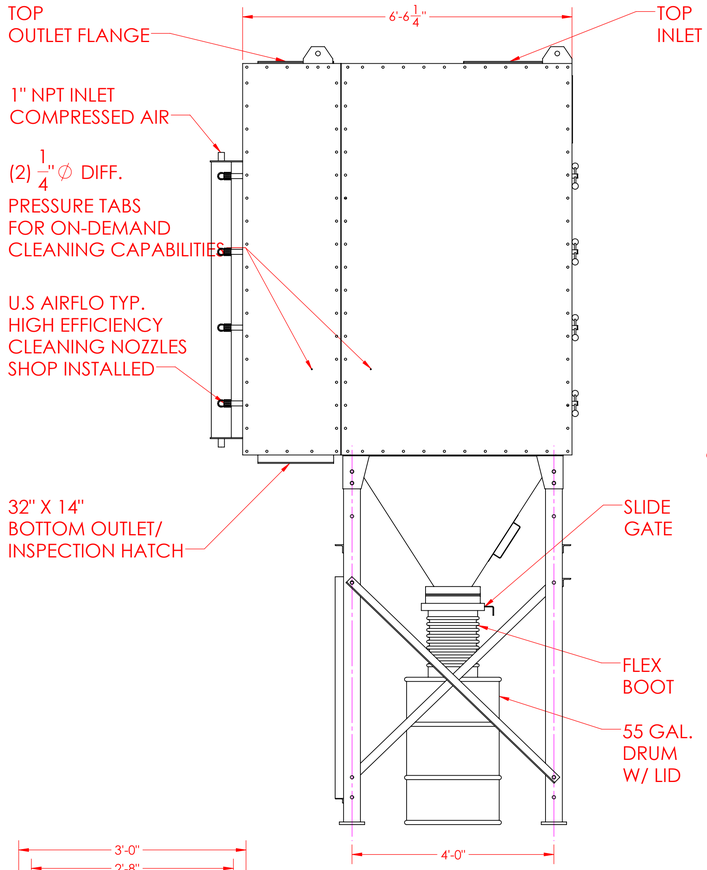

SIDE VIEW

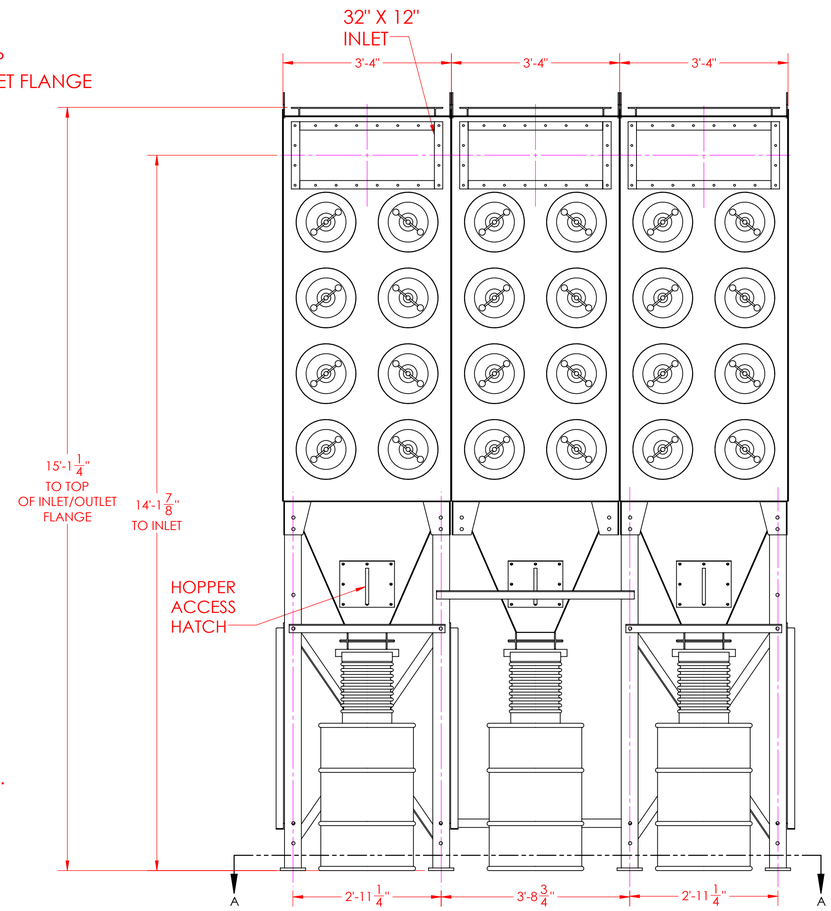

FRONT/FILTER SIDE

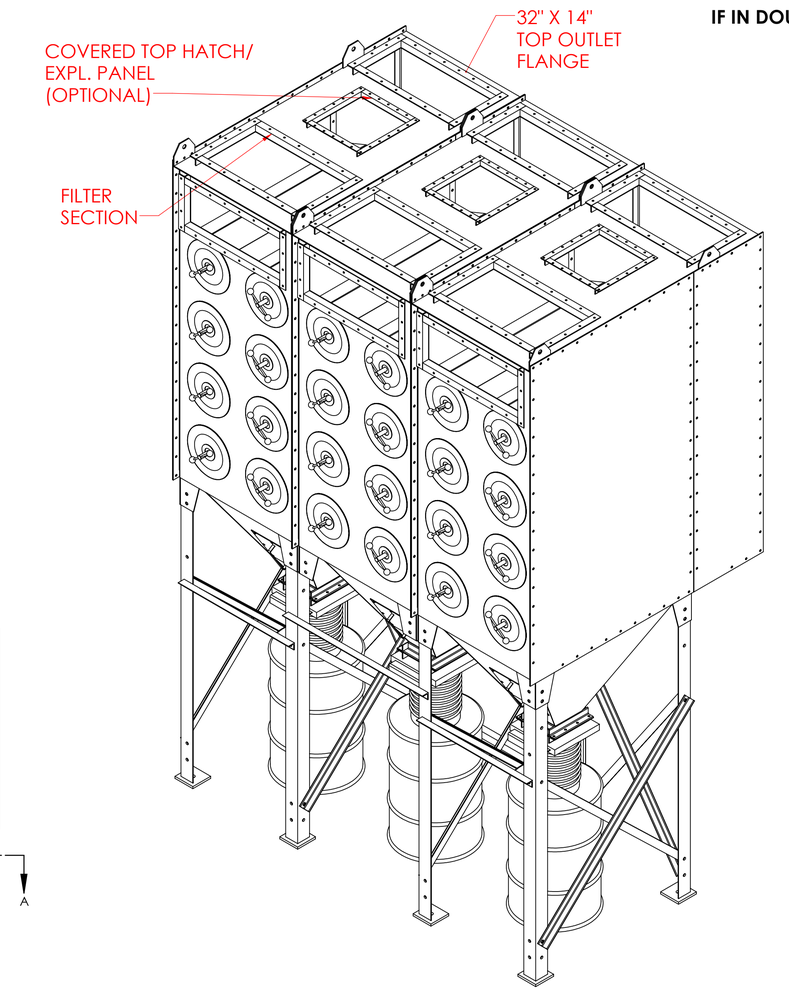

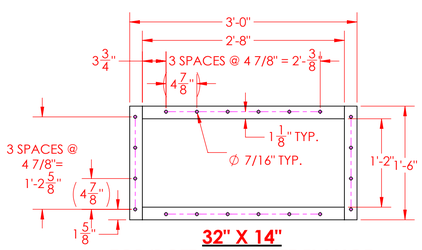

32" X 14"
TOP/BOTTOM OUTLET FLANGE
2"X2"X1/4" ANGLE
SCALE 1:12

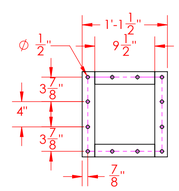

9" X 9"
HOPPER FLANGE
2"X2"X1/4" ANGLE
SCALE 1:12

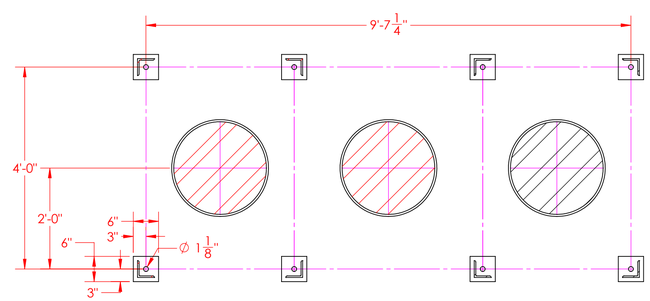

SECTION A-A
ANCHOR BOLT LAYOUT
SCALE 1:18

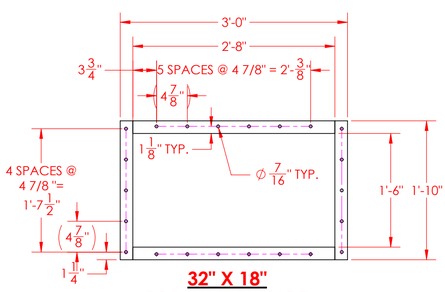

32" X 18"
TOP INLET FLANGE
2"X2"X1/4" ANGLE
SCALE 1:12

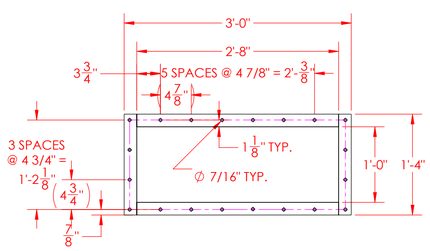

32" X 12"
FRONT INLET FLANGE (OPTIONAL)
2"X2"X1/4" ANGLE
SCALE 1:12

U.S AIR CLEANFLO - MODEL 4DCP-48	
# OF FILTERS:	48
FILTER DIMENSIONS:	13.8" ∅ X 26" L
FILTER AREA:	5,760 S.F OR 12,192 S.F
FILTER MEDIA:	SPUN BOND POLY. (120 S.F) OR NANOFIBER (254 S.F EA)
# OF PULSE VALVES:	8
COMPRESSED AIR REQUIREMENTS:	90-100 PSIG
AIR CONSUMPTION: (10 SECOND PLUSE INTERVALS)	50 SCFM (APPROX...)
DESIGN PRESSURE RATING:	-20" W.G.
STANDARD COLOR:	BLUE
SHIPPING WEIGHT: 12GA. /10 GA.	6,200 LBS/ 7,580 LBS

APPROVAL OF GENERAL DIMENSIONS / CLEARANCES / CENTERLINES ONLY INCLUDING WALL OPENING PENETRATIONS / LOCATIONS & GENERAL DRAWING NOTES

SIGNATURE: DATE:

TITLE:

CUSTOMER SHALL RETURN ONE COPY APPROVED

THIS DRAWING AND THE DESIGNS DEPICTED THERIN ARE THE PROPERTY OF U.S AIR FILTRIATION INC. OF MURRIETA, CALIFORNIA, AND ARE COVERED BY ISSUED AND/OR PENDING U.S AND FOREIGN PATENTS. THIS MATERIAL IS TO BE PROVIDED TO YOU SUBJECT TO THE CONDITION THAT IT SHALL NOT BE REPRODUCED, COPIED, DISCLOSED TO OTHER VENDORS OR MANUFACTURERS OF SIMILAR ARTICLES, LEMT OR OTHERWISE DISPOSED OF, DIRECTLY OR INDIRECTLY. IT SHALL NOT BE USED TO FURNISH ANY INFORMATION FOR THE MAKING OF DRAWINGS, PRINTS OR APPARATUS, OR PARTS THEREFORE, EXCEPT WHERE OTHERWISE SPECIFICALLY PROVIDED FOR BY CONTRACT WITH U.S AIR FILTRATION.

U.S. Air Filtration, Inc.

APPROVED BY:	DATE: 2/20/2023	CORPORATE OFFICE 10278 COUNTY ROAD TYLER, TX 75707 (951) 491 - 7282 FAX (951) 491 - 7281	SCALE: 1:18 / DATE: 1/27/2022 / DUST COLLECTION SPECIALIST / DRAWN BY TB
CHECKED BY:	DATE: 2/20/2023		DESCRIPTION: CARTRIDGE COLLECTOR GENERAL LAYOUT
DESIGNED BY: TB	DATE: 2/20/2023		CUSTOMER / DRAWING NUMBER 4DCP-48-GA1 / REV R2

TITLE:

SHEET 1 OF 1